HT_INDUSTRIEL_TABLE
1200mm
Start

WEIGHT: 8KG

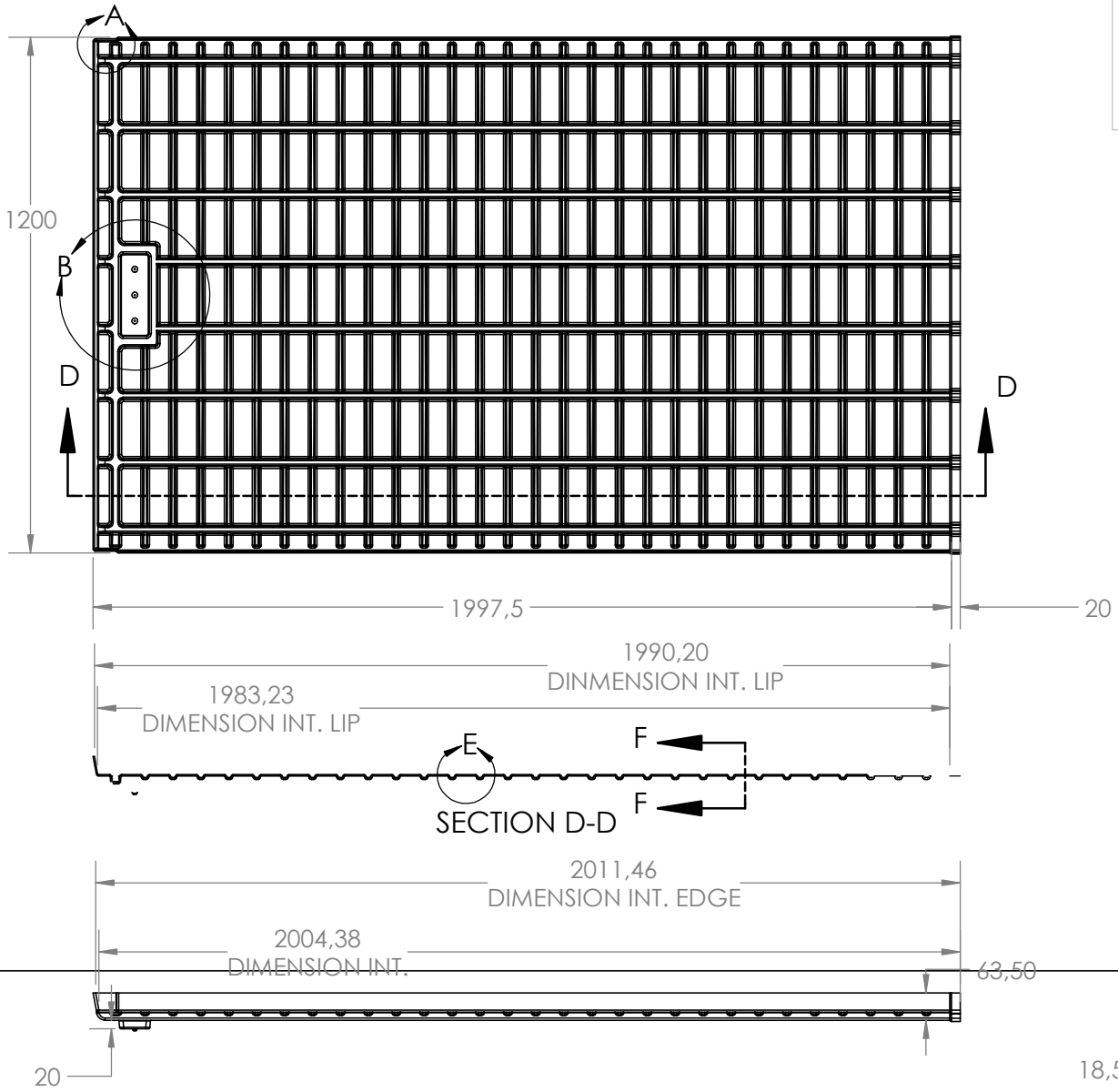

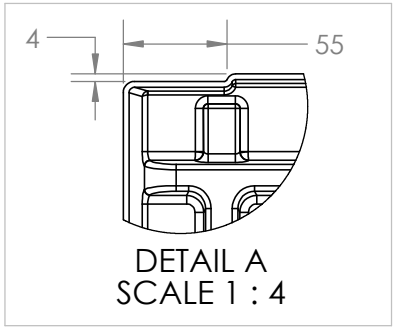

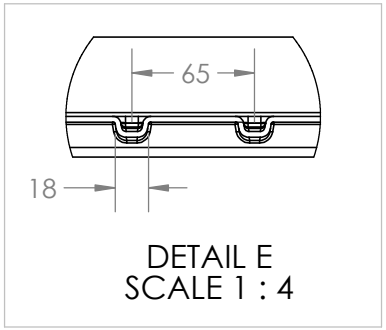

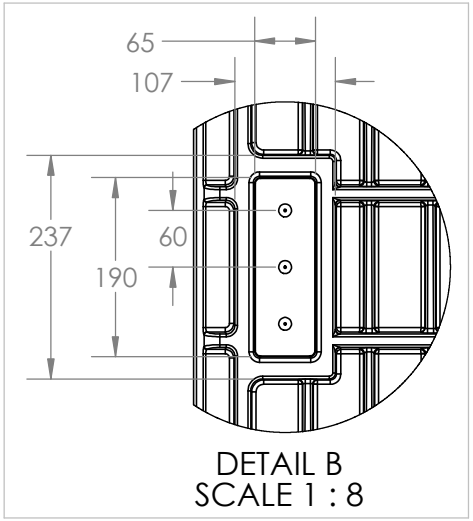

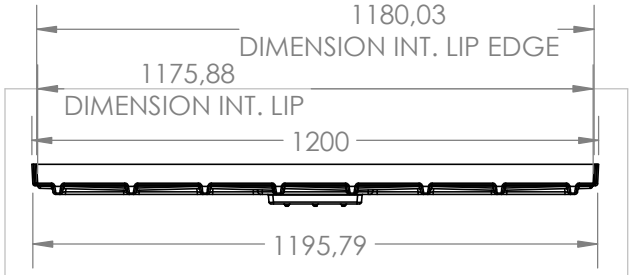

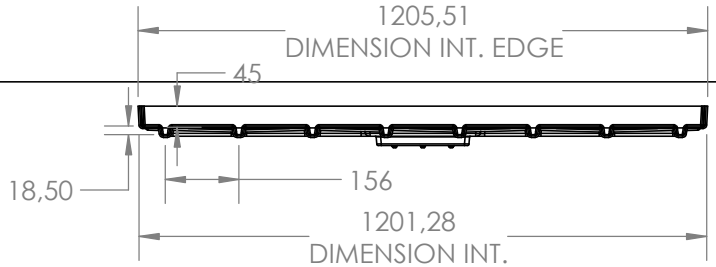

HYDROTEK 12300 rue de l'Avenir Mirabel, QC, Canada, J7J 2K4	**Tool Free: 1-877-777-0767** Orders Fax: 1-866-433-1577 Email: info@hydrotek.ca	CLIENT: **XXXXXX**	DIMENSIONS ARE IN: MM	**PROPRIETARY & CONFIDENTIAL**	Rev.:	**DRAWN: Alain Barabé**
		PROJET: TC_1200mm	MATERIAL: xxxxx	THE INFORMATION CONTAINED IN THIS DRAWING IS THE SOLE PROPERTY OF QUALIPLAST. ANY REPRODUCTION IN PART OR AS A WHOLE WITHOUT THE WRITTEN PERMISSION OF QUALIPLAST IS PROHIBITED.		DATE: 2019-05-06
		PART NAME :	ÉPAISSEUR INITIAL DU PLASTIQUE:			
		PART NO: X	REVISION: P.LECLAIR			SCALE: 1:16 SHEET NO. 1/3